Cambridge Assessment International Education
Cambridge International General Certificate of Secondary Education

DESIGN AND TECHNOLOGY **0445/41**

Paper 4 Systems and Control **October/November 2019**

MARK SCHEME

Maximum Mark: 50

Published

This mark scheme is published as an aid to teachers and candidates, to indicate the requirements of the examination. It shows the basis on which Examiners were instructed to award marks. It does not indicate the details of the discussions that took place at an Examiners' meeting before marking began, which would have considered the acceptability of alternative answers.

Mark schemes should be read in conjunction with the question paper and the Principal Examiner Report for Teachers.

Cambridge International will not enter into discussions about these mark schemes.

Cambridge International is publishing the mark schemes for the October/November 2019 series for most Cambridge IGCSE™, Cambridge International A and AS Level components and some Cambridge O Level components.

This document consists of **14** printed pages.

© UCLES 2019

Generic Marking Principles

These general marking principles must be applied by all examiners when marking candidate answers. They should be applied alongside the specific content of the mark scheme or generic level descriptors for a question. Each question paper and mark scheme will also comply with these marking principles.

GENERIC MARKING PRINCIPLE 1:

Marks must be awarded in line with:

the specific content of the mark scheme or the generic level descriptors for the question
the specific skills defined in the mark scheme or in the generic level descriptors for the question
the standard of response required by a candidate as exemplified by the standardisation scripts.

GENERIC MARKING PRINCIPLE 2:

Marks awarded are always **whole marks** (not half marks, or other fractions).

GENERIC MARKING PRINCIPLE 3:

Marks must be awarded **positively**:

marks are awarded for correct/valid answers, as defined in the mark scheme. However, credit is given for valid answers which go beyond the scope of the syllabus and mark scheme, referring to your Team Leader as appropriate
marks are awarded when candidates clearly demonstrate what they know and can do
marks are not deducted for errors
marks are not deducted for omissions
answers should only be judged on the quality of spelling, punctuation and grammar when these features are specifically assessed by the question as indicated by the mark scheme. The meaning, however, should be unambiguous.

GENERIC MARKING PRINCIPLE 4:

Rules must be applied consistently e.g. in situations where candidates have not followed instructions or in the application of generic level descriptors.

© UCLES 2019

GENERIC MARKING PRINCIPLE 5: Marks should be awarded using the full range of marks defined in the mark scheme for the question (however; the use of the full mark range may be limited according to the quality of the candidate responses seen).
GENERIC MARKING PRINCIPLE 6: Marks awarded are based solely on the requirements as defined in the mark scheme. Marks should not be awarded with grade thresholds or grade descriptors in mind.

© UCLES 2019

Section A

Question	Answer	Marks	Guidance
1(a)	Benefits of using a model could include: Can be tested View all-round the model Dimensions / proportions can be checked Different materials can be tried Shows more than a drawing Easier for a client to understand 2 · 1 marks	**2**	Accept any other valid benefit
1(b)	Benefits of a computer model could include: Can be viewed three dimensionally Accurate testing can be carried out quickly Variables can be changed quickly E.g. dimensions of components Model can be sent to other people easily Can be stored easily / does not take up physical space No cost for materials involved 2 · 1 marks	**2**	Accept any other valid benefit Reference to speed must be justified
1(c)	Other uses include: Stock control CAD / CAM Quality control Internet research 1 mark for suitable use	**1**	Accept any other valid use

© UCLES 2019

Question	Answer	Marks	Guidance
2	Explanation could include the following points: Opposing forces are balanced A state of rest / structure is stable Structure is not moving Clockwise moment = anticlockwise moment	**2**	Explanation that includes two points, two marks 1 mark for one point in explanation. Allow two marks for single point fully explained

Question	Answer	Marks	Guidance
3	**Force** · **distance** [1]	**1**	

Question	Answer	Marks	Guidance
4(a)(i)	Lever **A** is second order [1]	**1**	
4(a)(ii)	Tension	**1**	
4(a)(iii)	Counterweight **B** ensures that the lever arm returns to its resting position [1] when the tension in the cable is removed [1]	**2**	Allow marks for understanding shown.
4(b)	Reasons could include: More complex signals now required Faster to change signal or modify function No movement involved Can be automated Reduced maintenance 2 · 1 marks	**2**	Accept any other valid reason.

© UCLES 2019

Question	Answer	Marks	Guidance
5(a)	Rotary motion 1 mark to reciprocating motion 1 mark	**2**	
5(b)	Crank and slider. Cam and follower	**1**	Accept crankshaft Allow ecf from **5(b)**

Question	Answer	Marks	Guidance
6(a)	Risks when soldering include: Burns from soldering iron / solder Electric shock from soldering iron Fumes from flux Fumes from lead Splatter from solder / flux Lead transferred to hands 2 · 1 marks	**2**	
6(b)	Precautions include: Use of PPE, goggles / facemask Checking soldering iron for loose connections damage cable Extractor to remove the fumes Washing hands to remove traces of lead Use of lead free solder 1 mark for precaution, 1 mark for how risk is reduced	**2**	The risk chosen must come from **6(a)**

Question	Answer	Marks	Guidance
7	**Multimeter** or **Ohmmeter**	**1**	

© UCLES 2019

Question	Answer	Marks	Guidance
8(a)	Tolerance is the amount that the actual value of resistance can differ from the stated value, normally given as a percentage of the stated value Reference to stated value, 1 mark. Reference to actual value, 1 mark	**2**	Award mark for understanding shown. Accept percentage of error allowed.
8(b)	On a fixed resistor the tolerance is shown by a coloured band	**1**	Allow ‘letter’.

© UCLES 2019

Section B

Question	Answer	Marks	Guidance
9(a)(i)	Frame structure, 1 mark	**1**	
9(a)(ii)	Safety features include: Wrapping around lower part of poles at street level Mesh fencing at each of upper levels Vertical board on edge at each upper level Upper levels boarded across full width 2 · 1 marks for features identified	**2**	Accept any other valid points related to arrangement of poles.
9(a)(iii)	Triangulation is used to hold the structure rigid and prevent any flexing or movement away from the wall	**1**	Award mark for understanding shown.
9(a)(iv)	A strut will resist compression, 1 mark A tie will resist tension, 1 mark	**2**	
9(a)(v)	Method of spreading the load could include larger steel feet that fit into the bottom of vertical pole or boards placed below 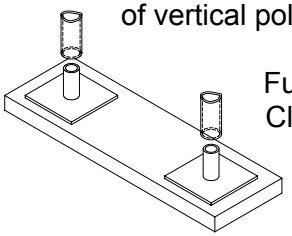 Functional method 1 mark Clear illustration / notes, 1 mark Method of fixing to vertical pole clearly shown, 1 mark	**3**	
9(b)(i)	Force at **A** is **compression**, 1 mark Force at **B** is **tension**, 1 mark	**2**	
9(b)(ii)	Non rusting / higher tensile strength / will last longer, 1 mark	**1**	

Question	Answer	Marks	Guidance
9(b)(iii)	Attached to the wall using glue, 1 mark. Suitable adhesive, e.g. epoxy resin or cyanoacrylate, 1 mark Alignment arrows should be used to attach square to the wall with longer face horizontal, 1 mark 2 · 1 marks	**2**	Accept superglue
9(c)(i)	Benefit of method 1: Straight cut at 90º, easy to align for joining Benefit of method 2: Tube remains sealed when joint is complete	**2**	Accept other valid benefits Allow ease of cutting at 90º Allow greater surface area
9(c)(ii)	Joining technique could be: Aligning joint accurately, 1 mark Followed by: Welding / brazing Bolt and captive nut inside one tube 1 mark for either	**2**	
9(c)(iii)	Gusset plate shown / described, 1 mark Clear drawing notes of positioning, 1 mark 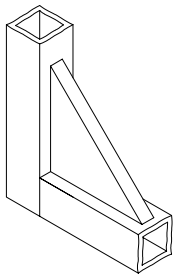	**2**	
9(c)(iv)	Substitution into formula, 200 · 175 = effort · 850, 1 mark 35 000 / 850 = effort, 1 mark Effort = **41.176** , 1 mark	**3**	Award 3 marks for correct answer with no working shown. **Accept 41.2N or 41.18**

Question	Answer	Marks	Guidance
9(c)(v)	With the barrow at rest the load is acting 175 mm away from the fulcrum, 1 mark. The effort will reduce when the barrow is rotated because the perpendicular distance from the load to the fulcrum decreases. 1 mark	**2**	Allow marks for understanding shown.

Question	Answer	Marks	Guidance
10(a)(i)	Gear **A** is a **worm gear**	**1**	
10(a)(ii)	Worm gears are used to: Give large reduction of speed in a small space Prevent reverse action / can only be turned in one direction Transfer torque effectively 2 · 1 marks	**2**	
10(a)(iii)	An idler gear is used to: Transfer drive from a driver gear to other gears in a train Reverse the direction of motion without affecting speed of rotation In a softer material as a sacrificial gear that can be easily replaced 2 · 1 marks	**2**	Allow 'to provide space between other gears'
10(a)(iv)	Gear **A** to gear **C** is 60:1 reduction, 1 mark Gear **D** to gear **E** is 60 / 16:1 reduction = 3.75:1, 1 mark Final gear ratio is 60 · 3.75 = **225:1**, 1 mark	**3**	
10(a)(v)	Properties of nylon include: No lubrication required Quiet in operation Will resist chemicals Can be moulded in one piece rather that teeth being cut individually 2 · 1 marks	**2**	

Question	Answer	Marks	Guidance
10(b)	Tensioning can be achieved in two ways: Moving the two gears further apart Applying pressure to the chain with a pad or jockey wheel Valid principal used, 1 mark Clear sketches / notes, 1 mark Fixing methods / extra parts clearly shown / described, 1 mark	**3**	
10(c)(i)	Safety considerations could be: Electricity – fuse / circuit breaker / insulation / earth system Natural gas – pressure kept to a safe level, ensuring no leaks Steam – boilers tested regularly, pipes checked for leaks, pressure regulator or safety valve Compressed air – pressure reduced to a safe level, all components fixed down before testing a circuit	**4**	Allow any other safety precautions for each of the power sources.
10(c)(ii)	Storage of electricity: Currently only available in the form of batteries Batteries can be bulky and costly Safety considerations of batteries overheating and causing fires. Not enough batteries are available for windy / sunny days when surplus electricity is produced	**3**	Explanation with three points, 3 marks Two points with no justification, 2 marks Allow 2 marks for a single point fully explained. Single point unjustified, 1 mark
10(c)(iii)	Use of solenoid valves for switching and reed switch cylinders for sensing the position of pistons Computer systems / programmable logic units can control the pneumatic components	**3**	Principal shown, 1 mark Two items shown and clearly drawn / explained, 2 marks Allow 2 marks for clear drawing / notes on a single aspect.
10(d)	Drawbacks of oil reservoir could be: Needs regular filling Time consuming As bearings wear more oil is used Oil is lost 2 · 1 marks	**2**	

Question	Answer	Marks	Guidance
11(a)(i)	Description could include: Checking cable Connect to power and allow to heat up Damp the sponge Clean tip on sponge Tin the tip with solder	**2**	Two points in description gives 2 marks One point, 1 mark Allow 2 marks for full description of a single point
11(a)(ii)	Process should include: Reheat joint with soldering iron Remove excess solder with desoldering tool or braid When all solder is removed pull wire from board	**2**	Two points in description gives 2 marks One point, 1 mark Allow 2 marks for full description of a single point
11(a)(iii)	Use of voltage drop 9 -1.8 = 7.2V, 1 mark Substitution into formula 0.015 = 7.2 / R, 1 mark R = 7.2 / 0.015 = **480Ω**, 1 mark	**3**	Award 3 marks for correct answer with no working
11(a)(iv)	The closest higher value is **560 Ω**	**1**	Allow ecf from **(a)(iii)**

<table>
<tr><th>Question</th><th>Answer</th><th>Marks</th><th>Guidance</th></tr>
<tr><td>11(a)(v)</td><td><table><tr><th>segment</th><th>voltage level</th></tr><tr><td>a</td><td>1</td></tr><tr><td>b</td><td>0</td></tr><tr><td>c</td><td>1</td></tr><tr><td>d</td><td>1</td></tr><tr><td>e</td><td>0</td></tr><tr><td>f</td><td>1</td></tr><tr><td>g</td><td>1</td></tr><tr><td>DP</td><td>0</td></tr><tr><td>common cathode</td><td>0</td></tr></table></td><td>3</td><td>Segments a,c,d,f,g at logic 1, 1 mark

Segments b,e,DP at logic 0, 1 mark
Common cathode at logic 0, 1 mark</td></tr>
<tr><td>11(a)(vi)</td><td>Method B would result in varying brightness for lit segments, 1 mark
Because current from all lit segments would go through the single resistor, 1 mark</td><td>2</td><td>Allow marks for understanding shown</td></tr>
<tr><td>11(b)(i)</td><td>A reed switch will be normally open, 1 mark and can be closed by a magnet, 1 mark, placed next to the switch, 1 mark. 2 · 1 marks</td><td>2</td><td>Allow marks for understanding shown</td></tr>
</table>

<table>
<tr><th>Question</th><th>Answer</th><th>Marks</th><th>Guidance</th></tr>
<tr><td>11(b)(ii)</td><td><table><tr><th>A</th><th>B</th><th>Q</th><th>X</th></tr><tr><td>0</td><td>0</td><td>0</td><td>1</td></tr><tr><td>0</td><td>1</td><td>0</td><td>1</td></tr><tr><td>1</td><td>0</td><td>0</td><td>1</td></tr><tr><td>1</td><td>1</td><td>1</td><td>0</td></tr></table></td><td>2</td><td>Column for Q correct, 1 mark

Column for X correct, 1 mark</td></tr>
<tr><td>11(b)(iii)</td><td>NAND gate symbol 1 mark</td><td>1</td><td></td></tr>
<tr><td>11(c)(i)</td><td> 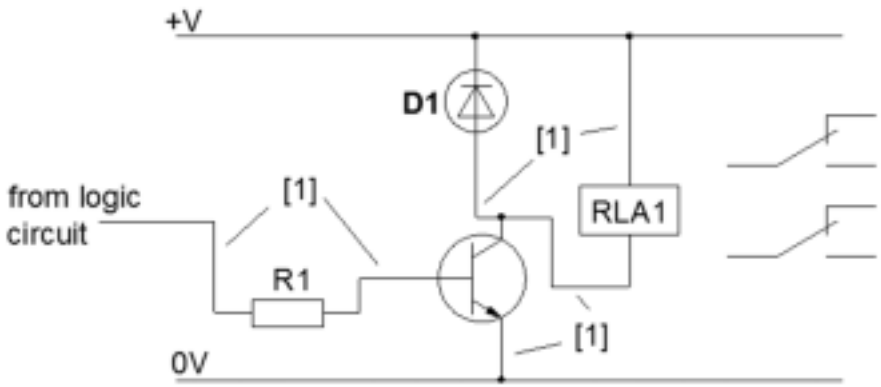
</td><td>3</td><td>1 mark for each pair of correct connections
No mark for extra connection to an individual pair</td></tr>
<tr><td>11(c)(ii)</td><td>D1 is needed to prevent back EMF, 1 mark
From damaging the transistor, 1 mark</td><td>2</td><td></td></tr>
<tr><td>11(c)(iii)</td><td>Double pole means two separate switches, 1 mark
Double throw means that each of the switches has three connections, NO, NC and C, 1 mark</td><td>2</td><td>Award marks for understanding shown</td></tr>
</table>